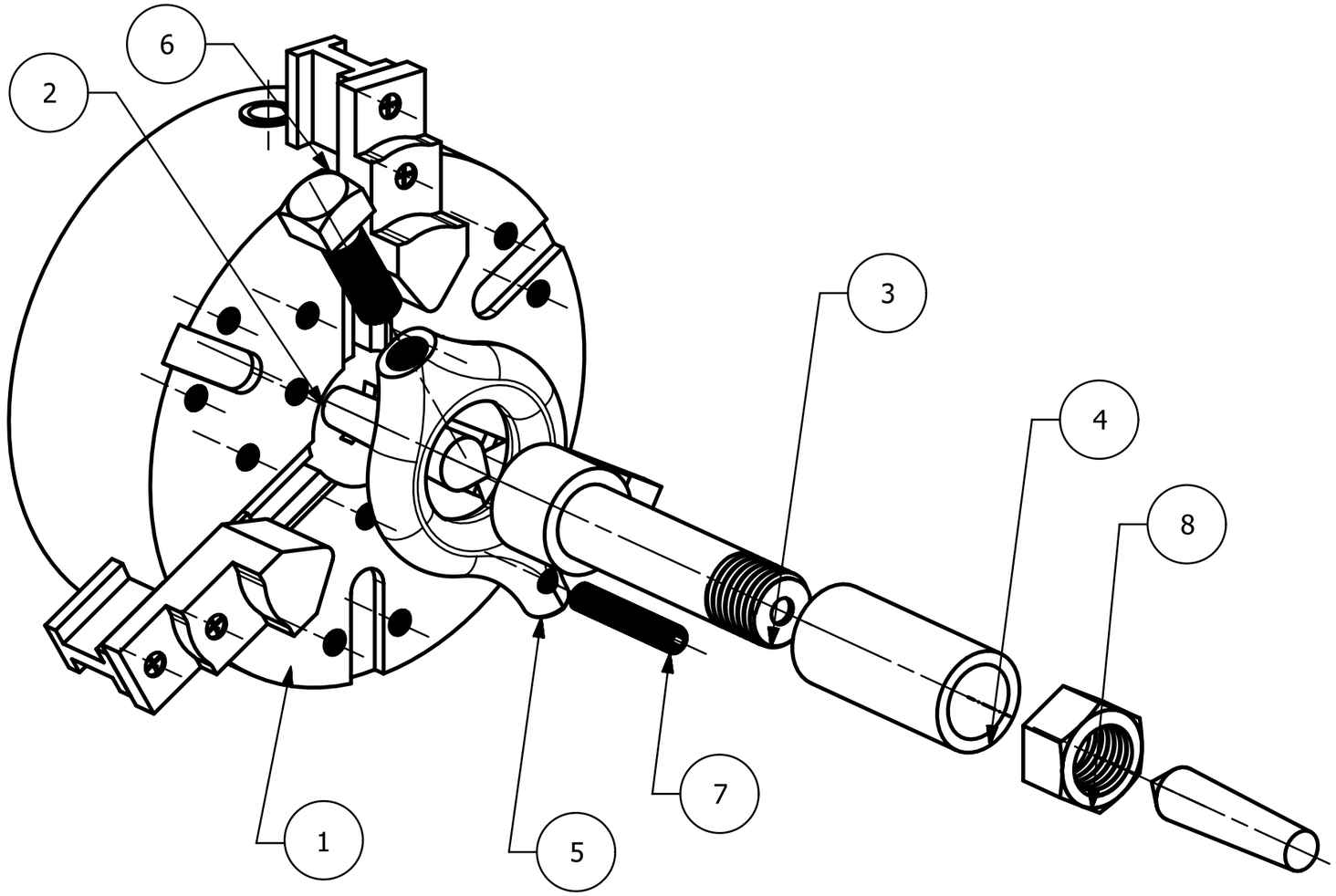

PC NO	PART NAME	QTY
1	CHUCK	1
2	CENTER QUILL	2
3	MANDREL	1
4	WORKPIECE	1
5	LATHE DOG	1
6	BOLT	1
7	ALLEN STUD	1
8	NUT	1

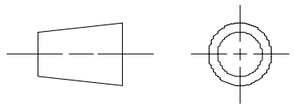

ALL DIMENSIONS IN MM

SIEMENS

DELHI INSTITUTE OF TOOL ENGINEERING

FIRST ISSUED	19-10-2016
DRAWN BY	OJAS VERMA
CHECKED BY	PHALGUNI GHOSH
APPROVED BY	SATPAL SINGH

TITLE: FIXTURE FOR SURFACE GRINDING (EXTERNAL)

SIZE	DWG NO.	SHEET REV
A3	4 (C) GRINDING FIXTURE	A
SCALE 1:2		SHEET 1 OF 1

A3